Wayne Dalton GARAGE DOORS

Rear Center Back Hangs

Installation Instructions

This supplemental installation instruction is to be used in conjunction to the main Installation Instruction and Owner's Manual provided with the door. The instructions included in this document are only those which deviate from the standard installation. All warnings and cautions listed in the main manual are applicable to this supplemental instruction as well.

P.O. Box 67 Mt. Hope, OH., 44660 www.Wayne-Dalton.com

NOTE: Doors heights over 8'0" or door widths over 12'0", require an additional set of rear center back hangs to be installed and located at the middle of the horizontal tracks, see parts breakdown.

Using perforated angle (may not be supplied), (2) 5/16" x 1-5/8" hex head lag screws and (3) 5/16" bolts with nuts (may not be supplied), fabricate rear center back hangs for the horizontal tracks. Measure and drill a 3/8" diameter hole through the center length of the horizontal track, as shown. Attach the rear center back hangs to the horizontal tracks with (1) 3/8" Truss head bolt and (1) 3/8" nut (may not be supplied).

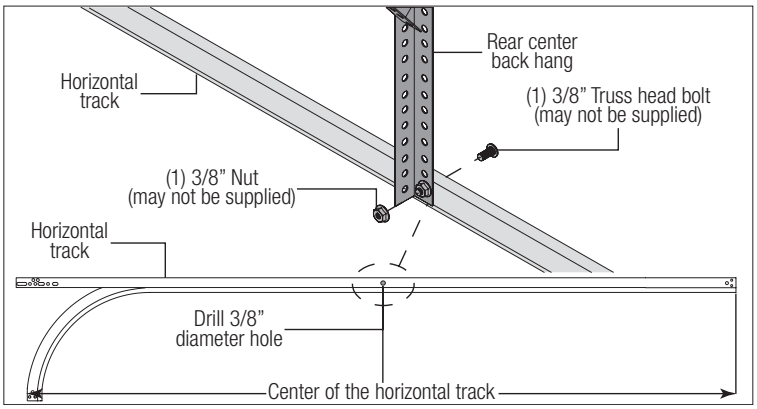

⚠ WARNING

KEEP HORIZONTAL TRACKS PARALLEL AND WITHIN 3/4" TO 7/8" MAXIMUM OF DOOR EDGE, OTHERWISE DOOR COULD FALL, RESULTING IN SEVERE OR FATAL INJURY.

IMPORTANT: DO NOT SUPPORT THE WEIGHT OF THE DOOR ON ANY PART OF THE REAR BACK HANGS THAT CANTILEVERS 4" OR MORE BEYOND A SOUND FRAMING MEMBER.

NOTE: If rear back hangs are to be installed over drywall, use (2) 5/16" x 2" hex head lag screws and make sure lag screws engage into solid structural lumber.

NOTE: 26" angle must be attached to sound framing members and nails should not be used.

Supplemental Insert

Part No. 347347 REV1 05/03/2016

©Copyright 2016 Wayne Dalton, a division of Overhead Door Corporation